ECO FRIENDLY

MADE IN THE USA

IMPACT®

Features and Benefits

- Standard Color – light gray with a high gloss finish
- Best material – bases, opaque covers and clear covers are all made of high-impact, UV resistant polycarbonate
- Easy ordering – One part number equals one completely assembled enclosure
- Super easy use – mounting flanges integral, so no extra hardware needed
- Flexible interior Mounting – bosses on rear wall and lid of opaque enclosure provide multiple mounting options for din rail, back panels, or other components
- Advanced face plate mounting system – Brand new completely unique and easy
- Secure – Choose your level of protection: pad lockable, tamper screw or tamper tag capable
- Frequency Friendly – Available with absolutely no metals of any kind on the enclosure which is extremely favorable for sending and receiving wireless signals
- UL-50 / c-UL Listed (file # E207562)

Our Impact® Line enclosures are the most versatile, feature packed, aesthetically pleasing, NEMA UL rated, non-metallic enclosures available. Features like extremely durable, UV resistant, wide temperature range, easy to machine, lighter than other non-metallic or metal materials, the "Made in USA" Impact® Line enclosures provide great value to any application.

Mechanical and Thermal	Test Spec.	Unit	Impact® Line
Instrumented Dart Impact @ 73° F		in/lb.	565
Falling Ball Impact @ 73° F	UL-746	in/lb.	900
Deflection Temperature @ 264 psi	ASTM D648	Deg. F	270
Modulus of Elasticity	ASTM D790	ksi	340
Temperature Range		Deg. F	-40 to 265
Flammable / UV Ratings	**Test Spec.**	**Unit**	**Impact® Line**
Flame Rating - UL	UL 94	-	5VA
Outdoor UV Exposure	UL	-	f1

10086 P/N	4X IP66	6P IP68	Clear Cover	Opaque Cover	Integrated Mounting Flange	Standard Hinge	Low Profile Hinge	Integrated Locking Latch	Stainless Steel Locking Latch	Non-Metallic Locking Latch	T-Rail Mtg System
P10086	✓	✓		✓	✓	✓		✓			✓
P10086C	✓	✓	✓		✓	✓		✓			✓
P10086LL	✓			✓	✓	✓			✓		✓
P10086CLL	✓		✓		✓	✓			✓		✓
P10086LP	✓	✓		✓	✓		✓	✓			✓
P10086LPC	✓	✓	✓		✓		✓	✓			✓
P10086LPLL	✓			✓	✓		✓		✓		✓
P10086LPCLL	✓		✓		✓		✓		✓		✓
P10086NL	✓			✓	✓	✓				✓	✓
P10086CNL	✓		✓		✓	✓				✓	✓
P10086LPNL	✓			✓	✓		✓			✓	✓
P10086LPCNL	✓		✓		✓		✓			✓	✓

** Sold separately*

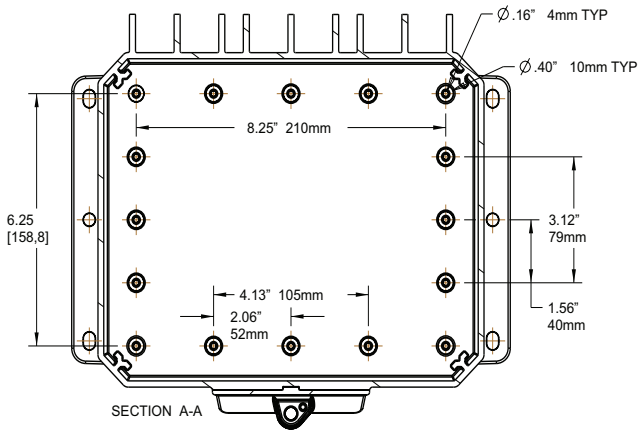

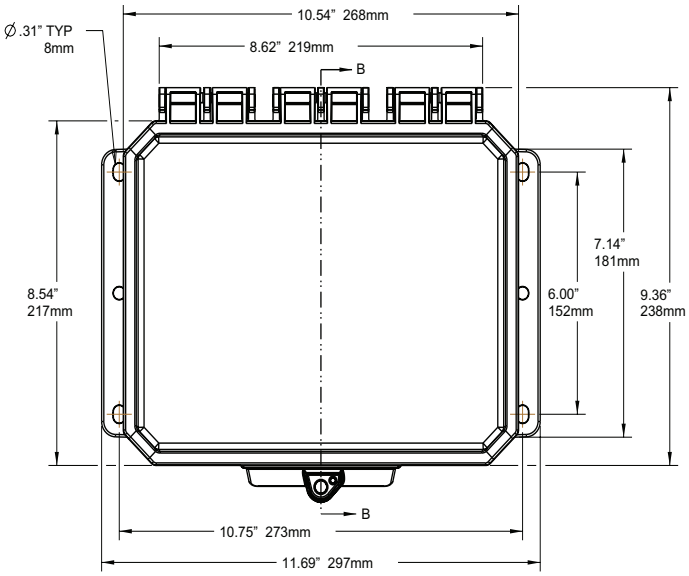

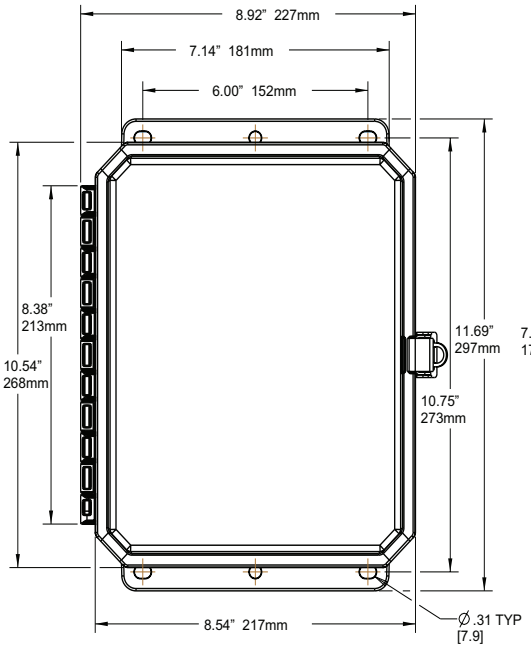

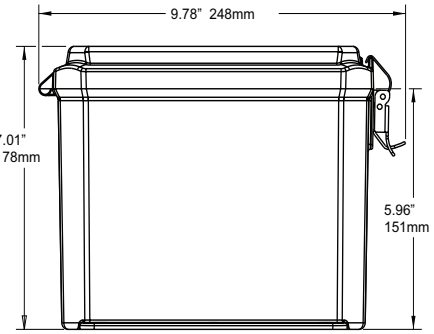

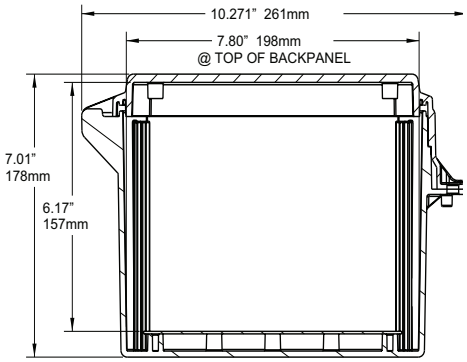

Register online to download this drawing off the Integra website at www.integraenclosures.com | Your company's logo or other information on the lid. Consult factory for details.

Accessories for 10x8x6 Impact® (For complete accessories, see pages 78-81)

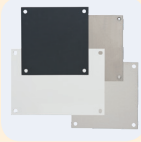

Back Panels
ABP108-IMP - Aluminum panel
SBP108-IMP - Steel panel
PVCBP108-IMP - PVC panel

Aluminum Swing Out Panels
ABP-108USP/USOPK - Complete panel kit
ABP-108USP - Aluminum swing out panels only
USOPK - Hardware only

Back Panel Adjustment Kit
BPAKG - Gray, Set Screw
BPAKB - Black, Set Screw
UBPAKG - Gray, Thumb Screw
UBPAKB - Black Thumb Screw

Air Vents
VENT 3 - Aluminum louvered
VENT 2 - Outdoor labyrinth

Steel Swing Out Panels
SBP-108USP/USOPK - Complete panel kit
SBP-108USP - Steel swing out panels only
USOPK - Hardware only

Mounting Screws
SP-10I - 10 Pieces self-tapping screws for bosses

Din Rail
DIN 8-IMP - 2 rails, 4 screws

Pole Mounting Kit
PMKG-28-IMP - 2" pole
PMKG-38-IMP - 3" pole
PMKG-48-IMP - 4" pole
PMKG-128-IMP - 12" pole

Cord Grips
IP68/NEMA 4X/6P rated
See page 72 for more details.